OpenCOTS Standard Frame
OC-48.2-3U-PS-225-PERIM

OpenCOTS is a line of standard mechanical and thermal products built for VPX and cPCI systems, aimed at cutting development time and getting your product to market faster. The OpenCOTS Standard Frame works for early prototypes or as a reliable baseline for custom module designs. Paired with our Wedgelocks and Ejectors, they deliver a high-performance thermo-mechanical platform with far less engineering effort, lower fabrication costs, and a shorter path to a finished product.

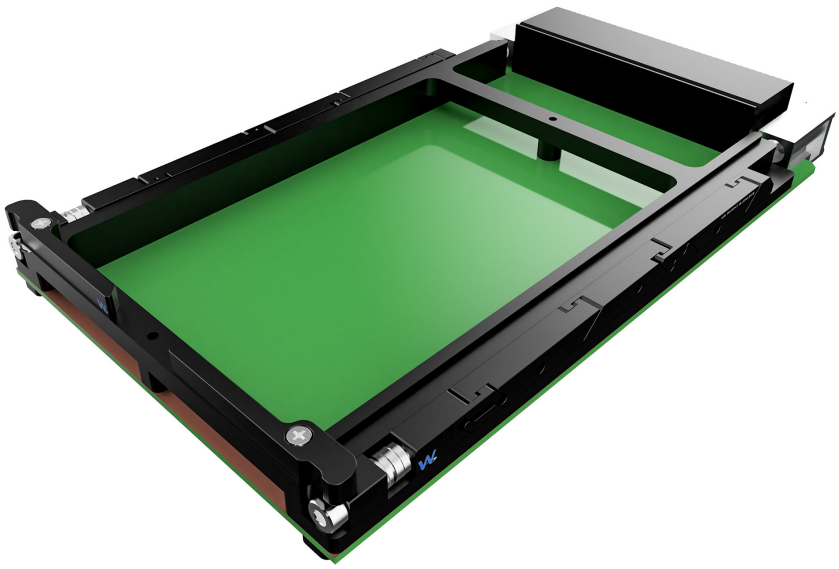

INCLUDES
Host Heat Frame
Host Rear Cover
Assembly Screws
SOLIDWEDGE™ Mounting Screws

MATERIALS
Heat Frame and Covers
Aluminum 6061-T6

FEATURES
Complies to VPX Standards
Customizable Heat Frames
Innovative XMC/PMC Heat Frames

VPX™ SPACEVPX™
OpenCOTS™

Only sold with SOLIDWEDGE™ and WaveTherm Ejectors for complete kit

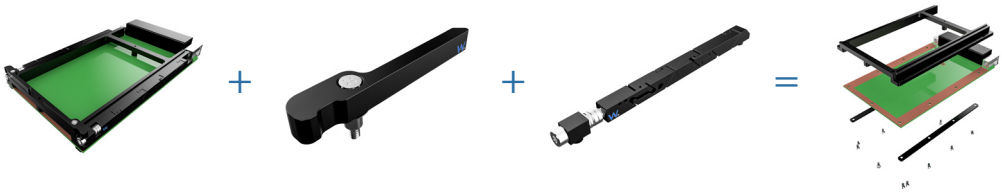

Configure a Kit

SALES - SALES@WAVETHERM.COM
TECHNICAL - TECH@WAVETHERM.COM
WWW.WAVETHERM.COM
919-307-8071

REV 20260310

PART NUMBER BUILDER

Required | Additional

OC	-	48.2	-	3U	-	PS	-	225	-	PERIM	-	Y

Family
OpenCOTS

Vita
48.2

Width
3U
6U

Orientation

Primary Side (160mm)	[PS]
Secondary Side (160mm)	[SS]
Pass Through (160mm)	[PT]
Primary Side (100mm)	[100PS]
Secondary Side (100mm)	[100SS]

Note: Options are not available in all configurations.
Use the OpenCOTS Builder for available configurations and more information

Wedgelock Width
0.225" Width - [225]
0.250" Width - [250]
0.300" Width - [300]

Mezzanine
[N] - No Mezzanine
[FMC] - FPGA Mezzanine Card
[PMC] - PMC/XMC Mezzanine Card
[Perim] - Perimeter Frame

Addt'l
[T] - Thick PCB
(Nominal > 0.063")

OC-48.2-3U-PS-225-PERIM PCB LAYOUT

Available for download as PDF and DXF via product page

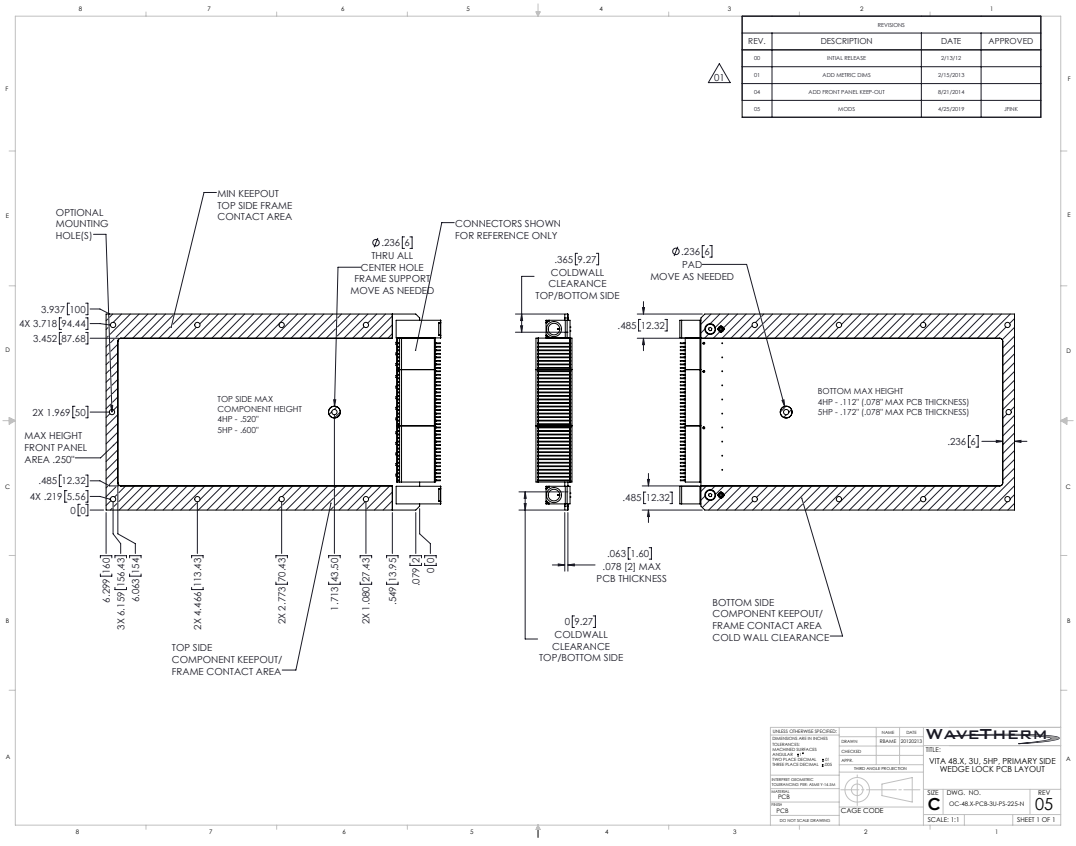

SALES - SALES@WAVETHERM.COM
TECHNICAL - TECH@WAVETHERM.COM
WWW.WAVETHERM.COM
919-307-8071

Standard Frame

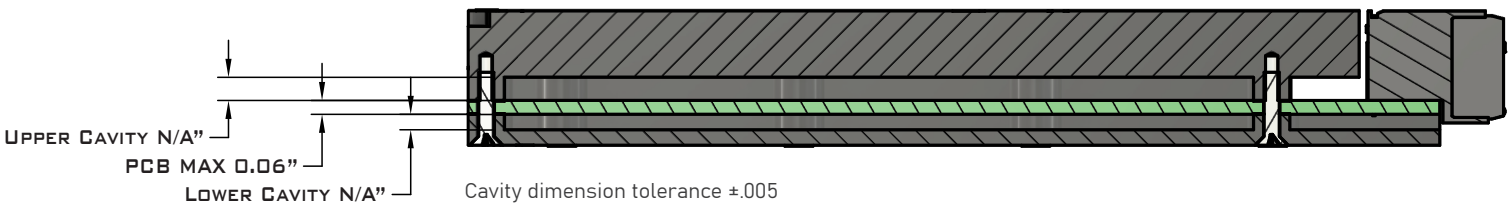

Selecting Gap Pads

When to Use Gap Pads

Use gap pads or components with higher heat dissipation, typically those dissipating around 2 W per in² or more, to ensure proper thermal contact between the component and the heatframe. Gap pads may not be needed for early protoype applications.

Determining Gap Pad Thickness and Skyline Height

The gap between the top of each thermal component and the heatframe surface varies due to component package height tolerances. Gap pads should be selected so that their compression range accommodates the full range of possible gap dimensions. This deflection capability also allows a single gap pad to interface with multiple nearby components that have slightly different mounted heights.

More Info

For more in-depth information on gap pads, view the OpenCOTS Design Guide

WaveTherm Recommended Gap Pads

Gap Pad	Thickness	Deflection Range	Typical Gap	Min Gap	Max Gap	Thermal Conductivity
Bergquist GPHC5000 0.04"	1.02mm	10-40%	0.77mm	0.61mm	0.92mm	5.0 W/m·K
Bergquist GPHC5000 0.06"	1.52mm	10-40%	1.14mm	0.91mm	1.37mm	5.0 W/m·K
Bergquist GPHC5000 0.08"	2.03mm	10-40%	1.52mm	1.22mm	1.82mm	5.0 W/m·K
Tflex 640	1.02mm	10-60%	0.66mm	0.41mm	0.91mm	3.0 W/m·K
T-Global TG-A1250	1.52mm	10-60%	0.98mm	0.61mm	1.36mm	12.5 W/m·K
Tflex HR6.5 0.06"	1.52mm	10-59%	1.00mm	0.63mm	1.36mm	6.2 W/m·K

*WaveTherm does not sell gap pads or distribute them with standard frames

HEATFRAME ASSEMBLY

ITEM NO.	PART NUMBER	DESCRIPTION	QTY.
1	35808	HEAT FRAME, VPX, 3U, 0.8", PRIMARY SIDE, SW-225, NO MEZZ	1
2	1479	OpenCOTS, VME, REAR THERMAL RAIL, PRIMARY SIDE WEDGE-LOCK, .063" THICK	2
3	FH100-#2-56x0.156-SS	SOLIDWEDGE MOUNTING SCREWS	4
4	FH-M2.5x6-SS	EDGE ASSEMBLY SCREWS	8
5	PH-M2.5x6-SS	CENTER ASSEMBLY SCREWS	2
6	SOLIDWEDGE	CUSTOMER SELECTED SOLIDWEDGE	2 (Purchased Separately)
7	EJECTOR	CUSTOMER SELECTED EJECTORS	2 (Purchased Separately)
8	PCB	CUSTOMER DESIGNED PCB	1 (Customer Supplied)

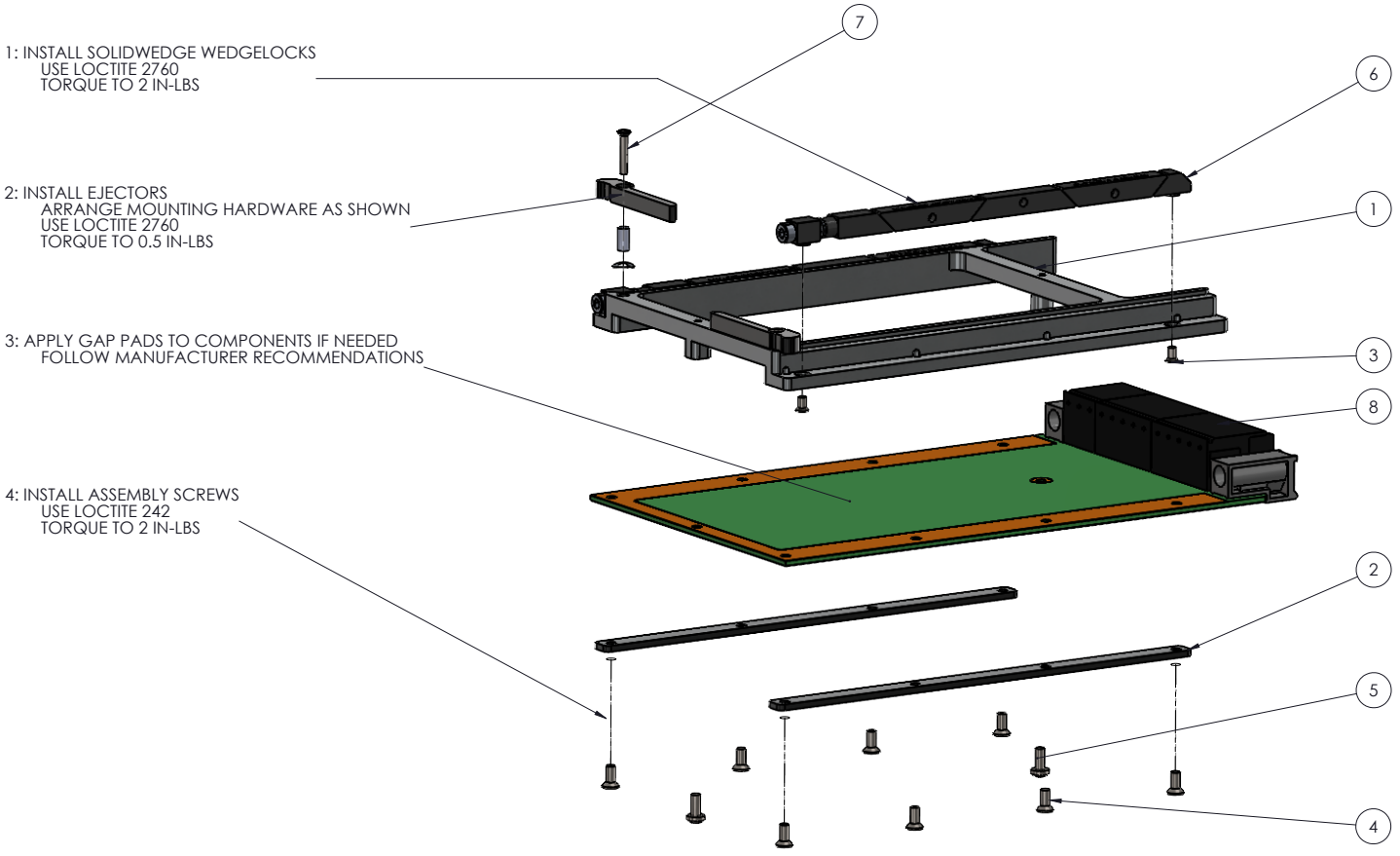

NOTE: FOR MORE DETAILED INSTALLATION AND OPERATION INFORMATION, REFER TO DATASHEETS OF INDIVIDUAL PRODUCTS

SALES - SALES@WAVETHERM.COM
TECHNICAL - TECH@WAVETHERM.COM
WWW.WAVETHERM.COM
919-307-8071