REVISIONS			
REV.	DESCRIPTION	DATE	APPROVED
00	INTIAL RELEASE	02/09/2012	RBAME
01	ADD METRIC DIMS	2/15/2013	RBAME
02	0.250" SOLIDWEDGE, CENTER BOSS ALIGNMENT	1/16/2019	RBAME
03	MODS	4/30/2019	JFINK

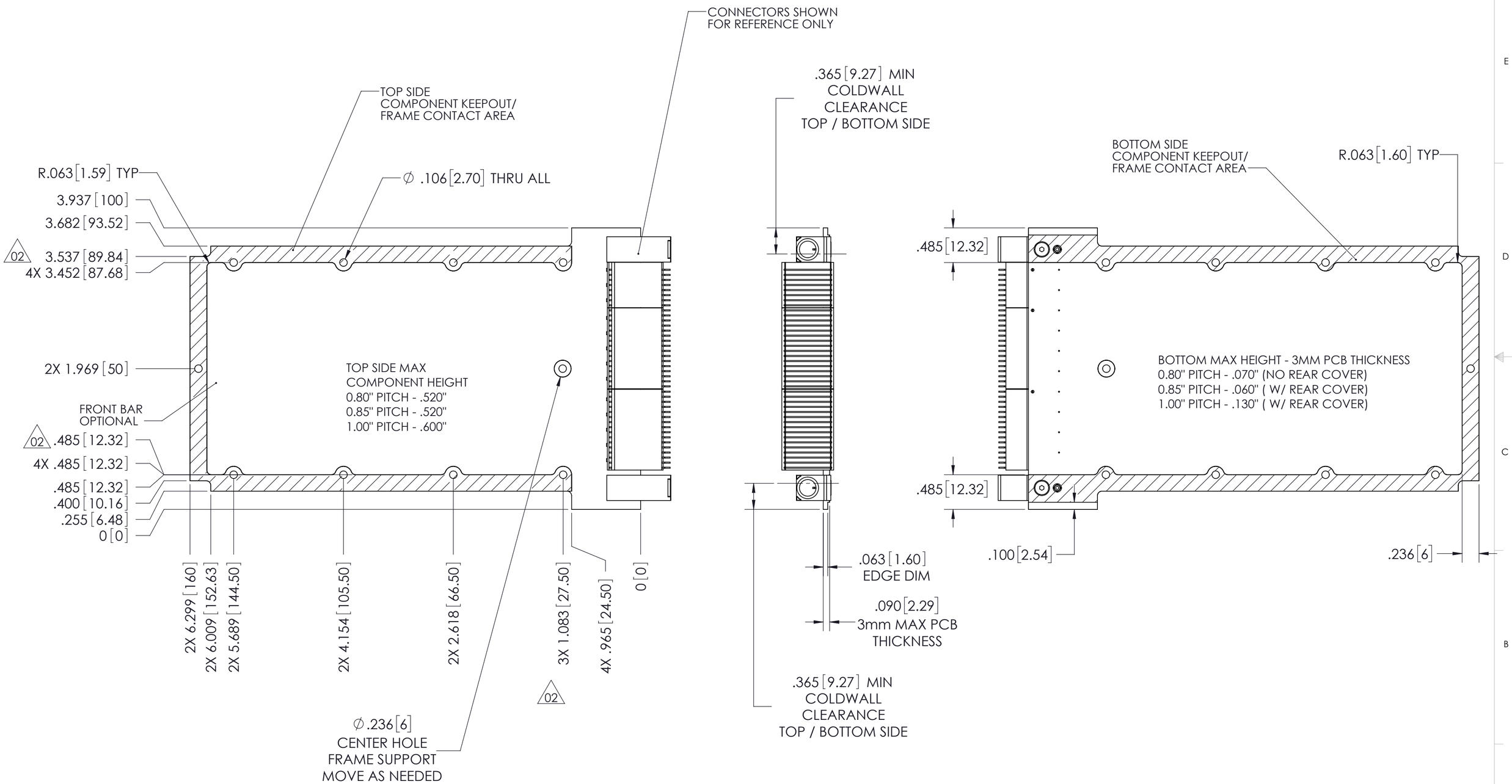

UNLESS OTHERWISE SPECIFIED:
DIMENSIONS ARE IN INCHES
TOLERANCES:
MACHINED SURFACES 125
ANGULAR ±1°
TWO PLACE DECIMAL ±.01
THREE PLACE DECIMAL ±.005

INTERPRET GEOMETRIC TOLERANCING PER: ASME Y-14.5M

MATERIAL

FINISH

DO NOT SCALE DRAWING

	NAME	DATE
DRAWN		
CHECKED		
APPR.		

THIRD ANGLE PROJECTION

CAGE CODE 6THJ1

WAVETHERM

TITLE:
VITA 48.X, 3U, SECONDARY SIDE WEDGE LOCK PCB LAYOUT

SIZE C | DWG. NO. OC-48.X-PCB-3U-SS-250-N-T | REV 03

SCALE: 1:1 | SHEET 1 OF 1