REVISIONS				
REV.	ECN	DESCRIPTION	DATE	APPROVED
01		INITIAL RELEASE	11/24/2025	RB

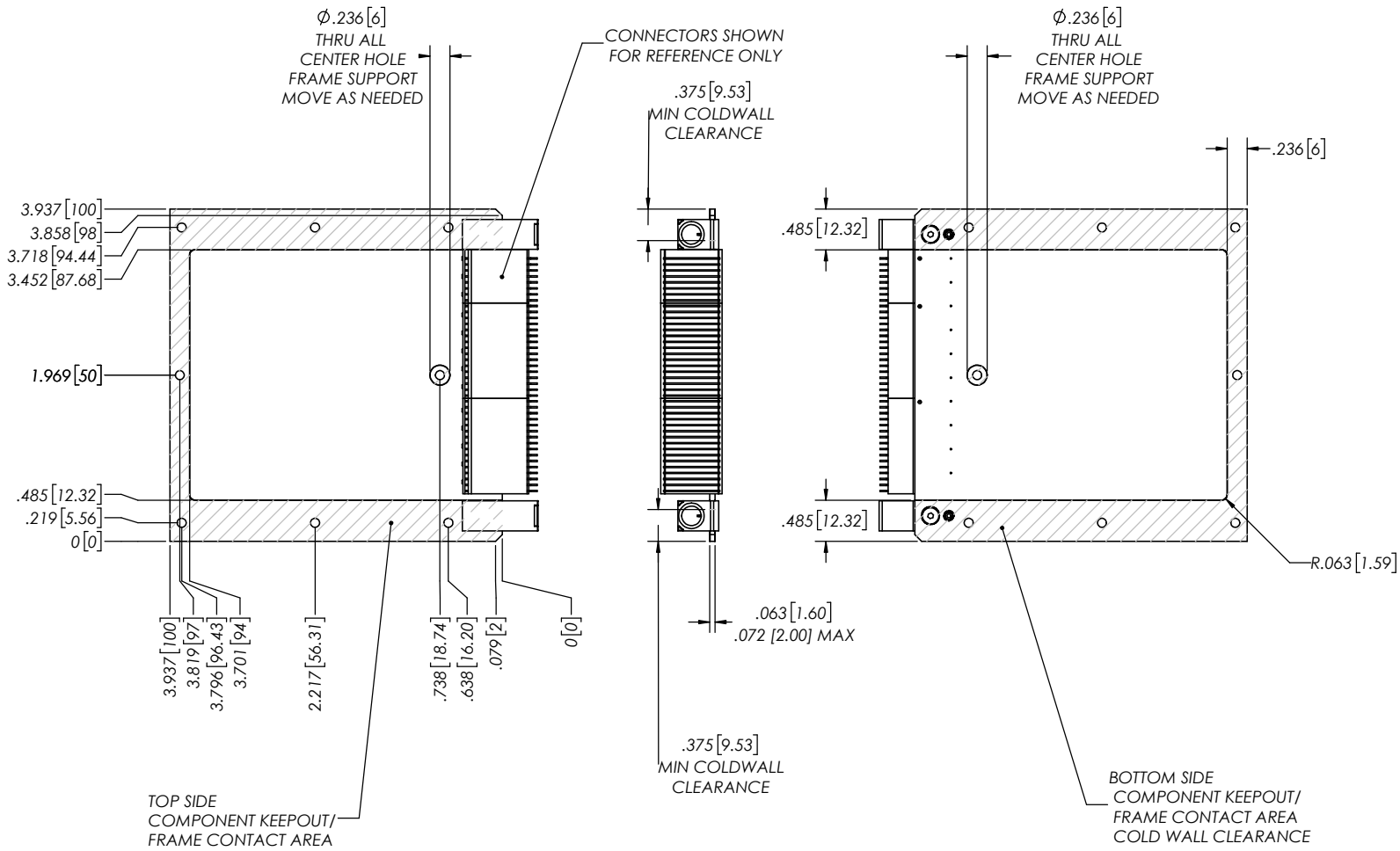

UNLESS OTHERWISE SPECIFIED:		NAME	DATE
DIMENSIONS ARE IN INCHES TOLERANCES: MACHINED SURFACES ANGULAR ±1° TWO PLACE DECIMAL ±.01 THREE PLACE DECIMAL ±.005	DRAWN	RBAME	20250408
	CHECKED		
	APPR.		
INTERPRET GEOMETRIC TOLERANCING PER: ASME Y-14.5M	THIRD ANGLE PROJECTION		
MATERIAL PCB			
FINISH PCB	CAGE CODE	6THJ1	
DO NOT SCALE DRAWING			

WAVETHERM

TITLE:
VITA 48.X, 3U-100, 5HP, PRIMARY SIDE WEDGE LOCK PCB LAYOUT

SIZE	DWG. NO.	REV
C	OC-48.X-3UPCB-100PS-250-N	01

SCALE: 2:1 | SHEET 1 OF 1

THIS DOCUMENT CONTAINS PROPRIETARY AND / OR CONFIDENTIAL INFORMATION THAT CANNOT BE REPRODUCED OR DIVULGED, IN WHOLE OR IN PART, WITHOUT WRITTEN AUTHORIZATION FROM WAVETHERM CORP.